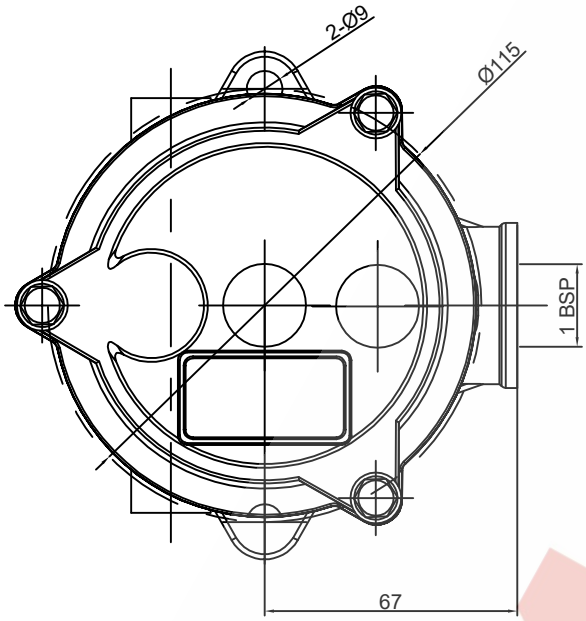

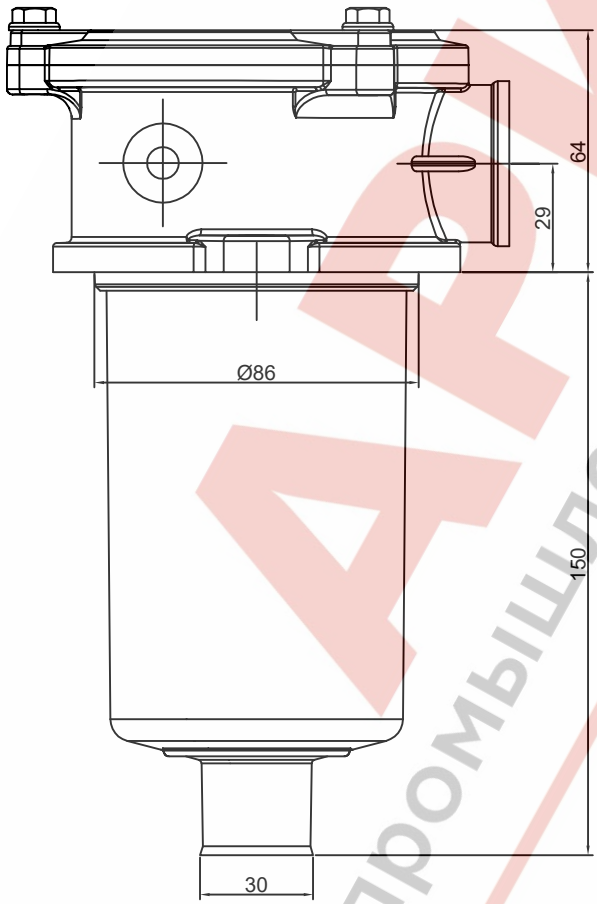

Technical data:

1. Material:
   Filter head: aluminum
   Filter cartridge: nylon
   Filter element: composite glass fiber
   Seal: nitrile rubber

2. Work pressure
   Max. 8 Bar

3. Traffic:
   Contact sales

4. Working temperature:
   -10 ℃ ~ +100 ℃

5. Filtering accuracy:
   Optional 3, 5, 10, 20, 50, 100 (μm)

6. Filter element and indicator models
   Filter element: CR091
   Transmitter: SPQ

7. Bypass opening and indicator light
   Bypass valve opening pressure: 1.7 Bar
   Indicator: visual/electrical

8. Appearance
   Surface sandblasting treatment

9. Product features
   1: The product filter element is equipped with a bypass valve
   2: An extension tube can be added to the bottom of the product according to customer needs

10. Things to note
   After product processing and assembly, an air tightness test should be conducted.
   Test pressure: 8 Bar

标记	处数	更改文件号	签字	日期	RETURN FILTER	图样标记	重量	比例
								1:3
设计					OMTF-112	共 张	第 张
审核							
批准							
			日期				

АРМС
промышленная и мобильная гидравлика